Weiking Electronics Manufacturing (Xi' an) Co., Ltd

WKPG-50A

PREGULATOR MODULE

FEATURES：

- **Compliant to MIL-STD-704**
- **Transient suppression:80V/50ms**
- **Sprike suppression: 600V/20μs**
- **Low line input 8V/50ms**
- **Input voltage range:10VDC to 80VDC**
- **Output power range:4W to 50W**
- **Inhibit function**
- **Case operating temperature:-55℃～+105℃（M）**
- **Compatible with 16～40V_{DC} converters**

DESCRIPTION：

WKPG-50A designed to extend DC/DC converter input bus voltage to meet system operation during voltage transients, spikes, cranking and drop out occurring in military or other systems. The design has been carried out with surface mount components and is manufactured in a fully automated process to guaranty high quality for aerospace, military and high-end industrial applications.

WKPG-50A features 3 modes of operations as follow:

Low line operation:When the input bus voltage drops down below the permanent input voltage (16V), the WKPG-50A operates in boost mode to provide an output voltage compatible with DC/DC converter. When the input bus voltage drop down below 8V, all operation will be stopped.

Normal operation:Normal operation occurs between 16V to 40V input voltage, the module is then operating in steady transparency state.

Transient and spike operation: The module can sustain input transient up to 80V/50ms and spike up to 600V during 20μs with 50 ohms impedance.

ABSOLUTE MAXIMUM RATINGS:

Pin-Solder Temperature (10s): 300℃

Output power: 50W

Storage Temperature range: -55℃～125℃（M/I）

Operating Temperature(T_C): -55℃～105℃(M)/-40℃～85℃(I)

THE ELECTRICAL CHARACTERISTICS:

			WKPG-50A			
Parameter	Test condition [1]	Input condition	MIN	TYP	MAX	单位
Input voltage	Turn-on voltage	Full load	10	-	-	V
		Full load	16.0	-	17.2	
	Continuous input	Full load	18	-	37	
	Voltage drop-out	Full load	-	-	8V/50ms	-
	Voltage transient input	Full load	-	-	80V/50ms 间隔大于 1min	
	Voltage spike input	Full load	-	-	600V/20μs	
Input current	Inhabit mode	-	-	-	50	mA
Output voltage	Drop-out input	(10～18)V_{DC}	-	20	-	V
	Continuous input	(18～37)V_{DC}	-	(Vin-0.6)V	-	
	Transient input	(37～80)V_{DC}	-	37.5	40	
Output power	-	(10～18)V_{DC}	-	-	30	W
	-	(18～37)V_{DC}	-	30	50	
	-	Transient input	-	-	30	
efficiency	Full load	28V Full load	95	-	-	%
Under voltage lock out [2]	No load～full load	-	7	7.2	8	V
Start up time	Full load	All input range	-	-	30	ms
On/off			Pin ON/OFF connect to GND, module operation off			
Insulation resistance			≥100MΩ@500V_{DC}(input-case; output-case)			

Note:

1) Unless otherwise specified, T_A=25℃, V_{IN} = 28V_{DC}, 100% load.
2) Guaranteed by design.

TYPICAL PERFORMANCE CURVES:

Transient response at 80V/50ms

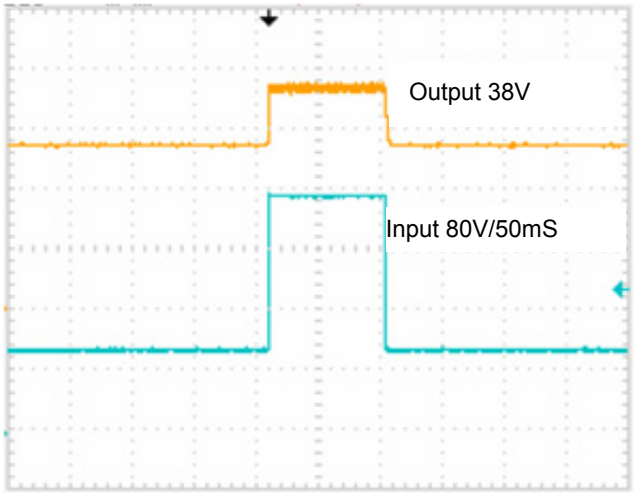

Brown-out response at 8V/50ms

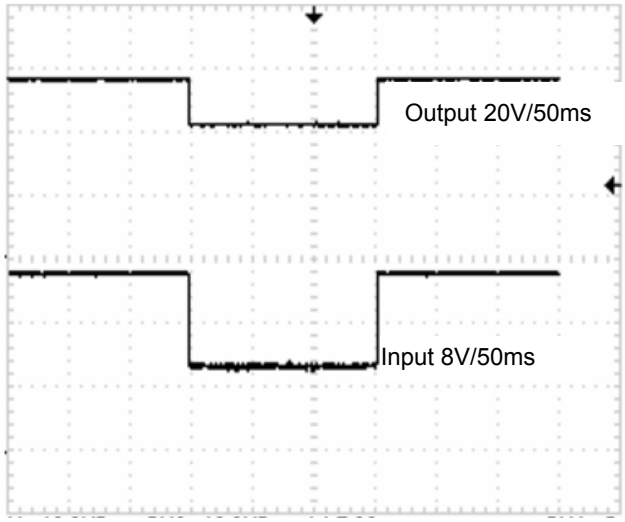

APPLICATION NOTE:

- **Typical connection shown as below:**

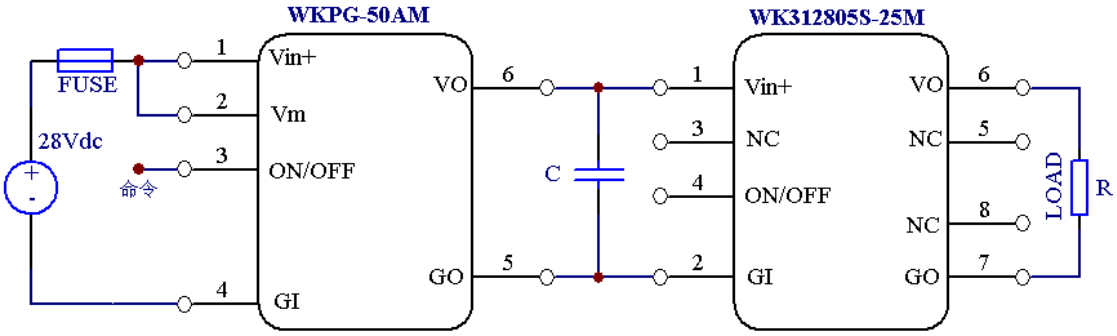

Note: C - optimize module, 30W output power use 47μF Capacitor.

ON/OFF: pin 3 connect to GND, module stop working.

- **Pin 2 show**

  Pin 2 set voltage of boost mode, unless specified, connect to input pin.

- **OUTPUT CURVES**

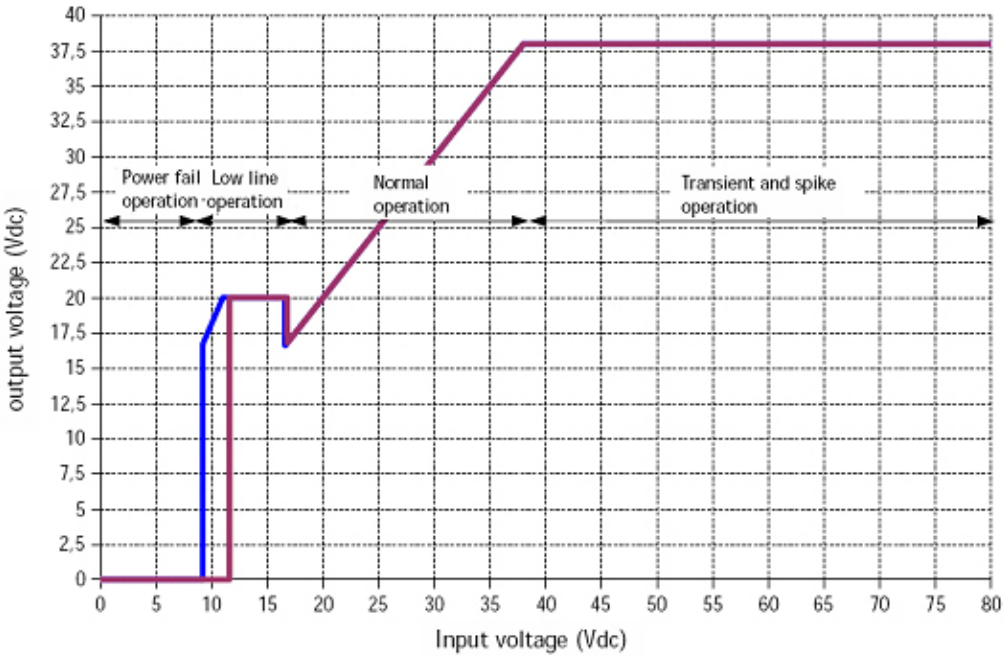

Warning:

Do not short module output or use big capacitor load,or destroy the module.and if have hold up time need, use hold-up module.

Guaranteed input power enough when start with low line input,or destroy device.

ENVIRONMENTAL SCREENING:

Class	NO.	Test Items	Methods	Request	Condition
I	1	Burn-in	---	100%	T_C=85℃ 48h
M	1	Environmental Stress Screening (ESS)	MIL-STD-2164	100%	-
	2	Burn-in	---	100%	T_C=105℃ 168h

MECHANICAL SECIFCATIONS

Volume:≤12cm^3 weight：≤30g material：10# steel

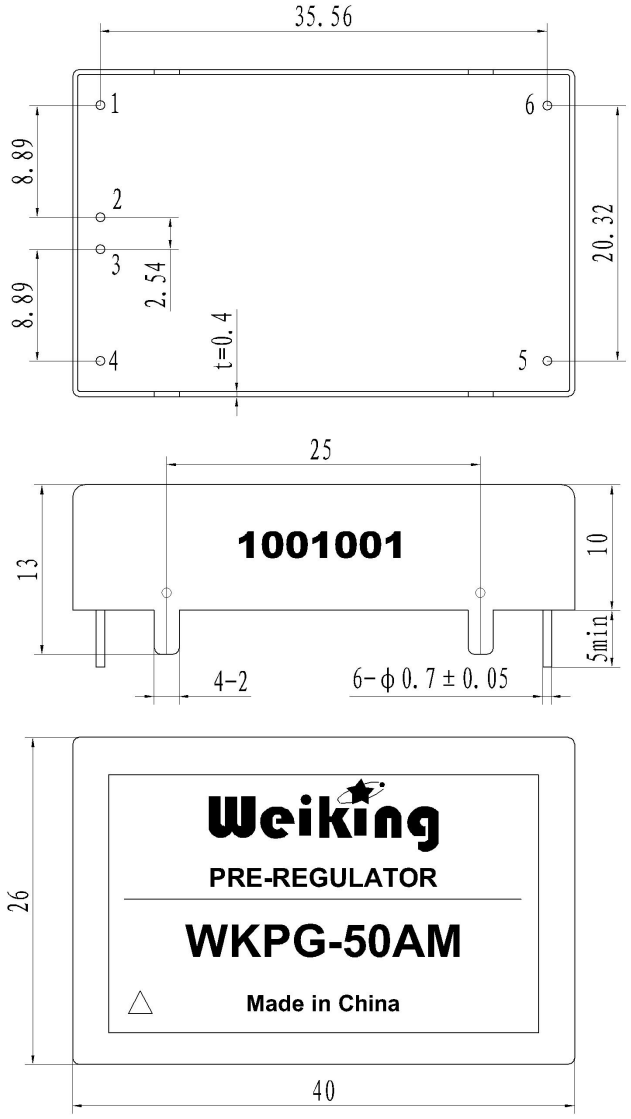

PIN	PIN FUNCTIONS
1	+Input (Vin+)
2	Input measure(Vm)
3	ON/OFF
4	-Input (Vin-)
5	-Output(Vo-)
6	+Output(Vo+)

UNITS: mm
TOLERANCE: ±0.2mm。

ORDERING INFORMATION:

MODEL NO SPECIFICATION：

WK PG - 50 A M

- GRADE:M=MILITARY I=INDUSTRY
- A:IMPROVED
- OUTPUT POWER:50=50W
- SERIALS NUMBER
- MODEL

Mark specification：

Serial Number 1001 001, example indicates this product has been manufactured in the 1th week of 2010 and the sequence number is 001.